Bottom

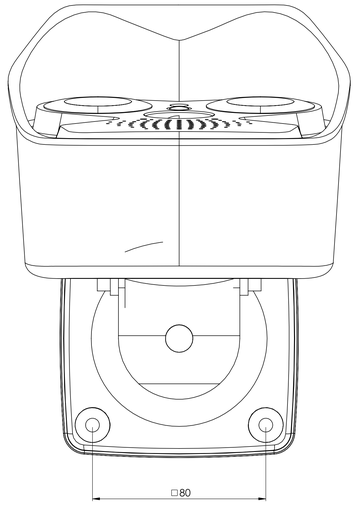

Side

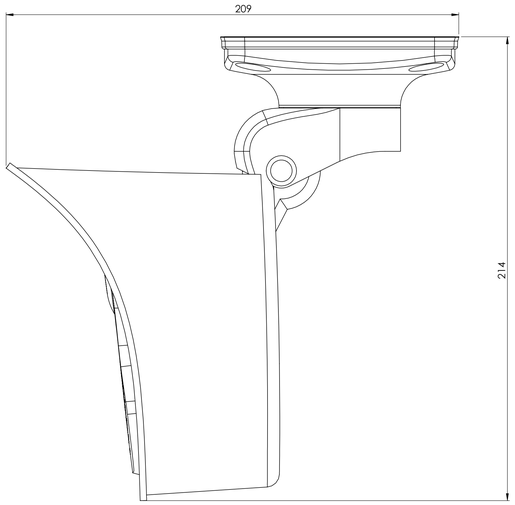

Front

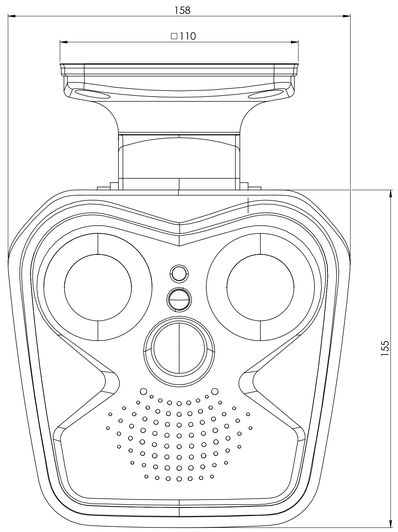

rubber sealing

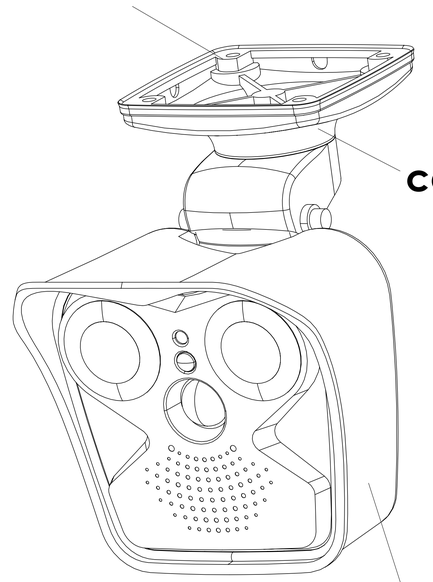

ceiling mount

Camera housing

Top

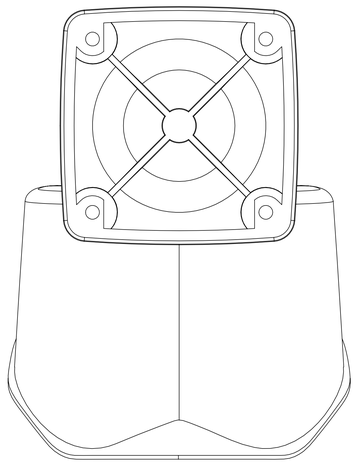

MOBOTIX does not take responsibility for the correctness and completeness of this data and recommends to verify the design and measures with the actual product delivered. Measures on goods delivered may vary due to manufacturing tolerances and environmental temperature material impacts. Technical specifications of the enclosed data is subject to change without notice. As all Design Information are subject to MOBOTIX IPR, the reproduction and distribution of this data as well as the communication of its contents is prohibited and offenders will be held liable.

Für diese Unterlage behalten wir uns alle Rechte vor. Sie darf nur für den von uns bestimmten Zweck benutzt werden. Sie darf weder Dritten zugänglich gemacht noch anderen zugänglich gemacht werden.

	Datum	Name	Werkstoff	Gewicht
Bearb.	13.07.2018	MEDie		
Gepr.ff				Maßstab: 1:1
Norm	CAD-AG	SolidWorks		

MOBOTIX BeyondHumanVision

M1x_AllroundDual (ceiling mount)

Ref.	Änderung	Datum	Name

Ersatz für

Blatt 1 von 1